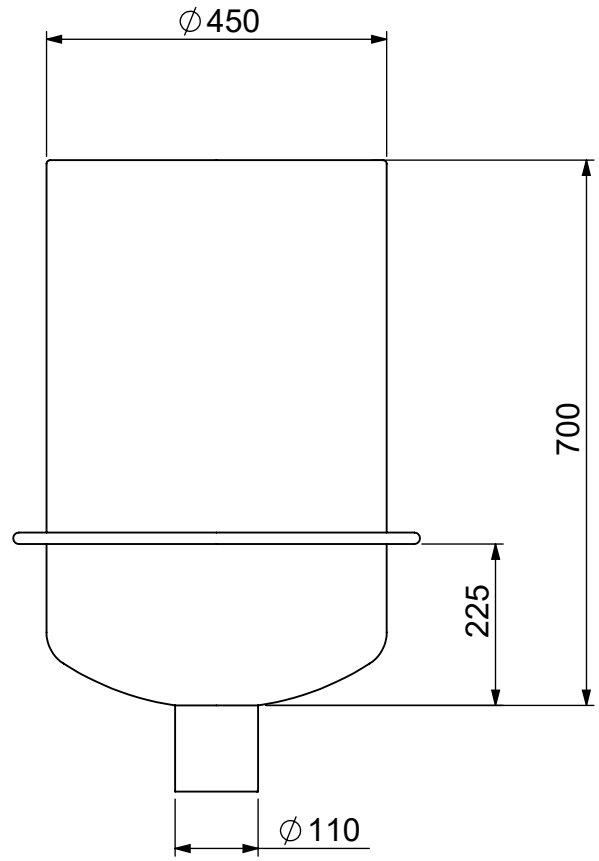


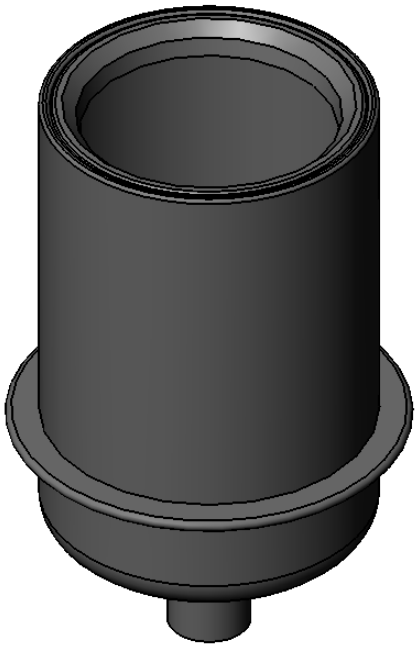

UNLESS OTHERWISE SPECIFIED:
DIMENSIONS ARE IN MILLIMETERS
SURFACE FINISH: N8
TOLERANCES: +/-2%

HOFIT KIBBUTZ KINNERET Ltd.
D.N. EMEK HAYARDEN 15118, ISRAEL
tel.+972-4-6759530/1/2 F.+972-4-6759518

| | NAME | SIGN. | DATE | REV. |
|---|---|---|---|---|
| DRAWN | ILAN GIDONI | | 19/01/2017 | A |
| CHK'D | | | | |
| APPV'D | | | | |
| Q.A | | | | |

# DROP BASE CHAMBER D.45.H.70 OUT 110

FILE NAME:

| MATERIAL: | FINISH: | Remark: | DWG. NO. |
|---|---|---|---|
| PE | | | CAT. NO. 0204-DR474 |

WEIGHT: S:\MyWorks\0204\מוצרים\שרטוטים להכנה-DR474\ SCALE: 1 : 1 SHEET 1 OF 1