Rev.	Name	Description	Date	ECO No.
B	GIL HASSON	INLET/OUTLET CHANGE	04.10.21	ECO021
C	GIL HASSON	ADD STENGTHEN LEGS	28.11.23	EC23000057

OUTLET	INLET	CAT. NO.
110 (4")	110 (4")	0208-STC1094H
160 (6")	160 (6")	0208-STC1096H
200 (8")	200 (8")	0208-STC1098H

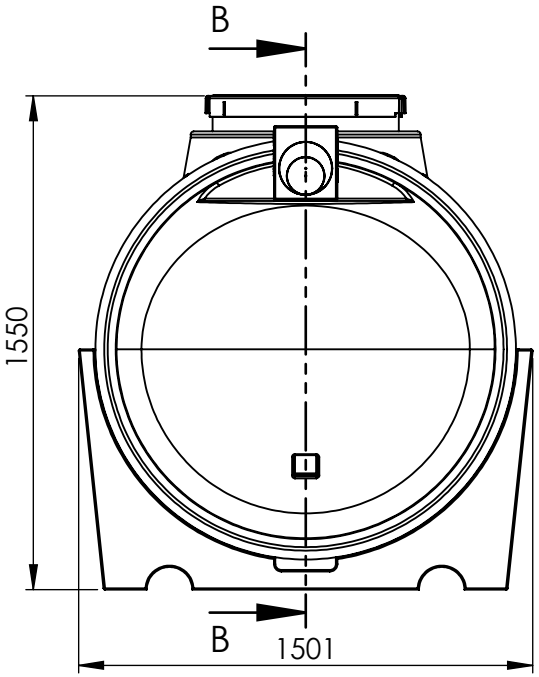

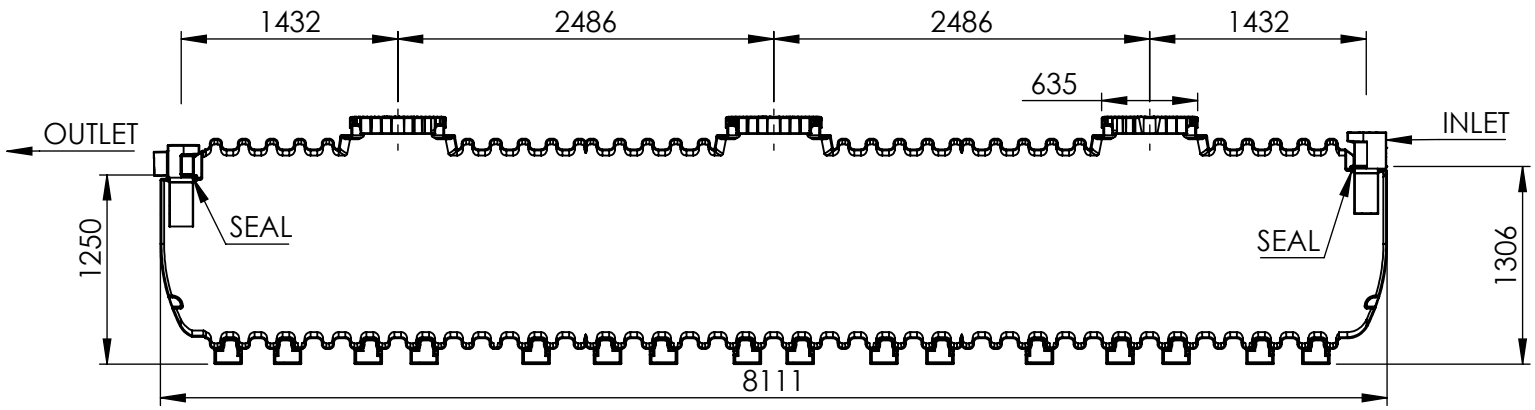

SECTION B-B
SCALE 1 : 50

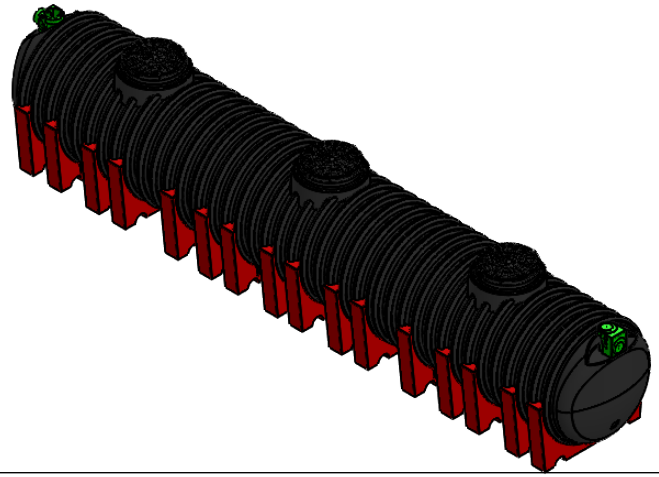

UNLESS OTHERWISE SPECIFIED:
DIMENSIONS ARE IN MILLIMETERS
SURFACE FINISH: N8
TOLERANCES: +/-2%

	NAME	SIGN.	DATE	REV.
DRAWN	Gil Hasson		30/11/2023	C
CHK'D				
APPV'D				

MATERIAL: PE
FINISH:
Weight [kg]:

Huliot Hofit
Hofit By Huliot Group ltd.
Kibbutz Kinneret, Jorden Valley, 1511800 ISRAEL
tel.+972-4-6759530 | info@hofit.com | www.hofit.com

SEPTIC TANK 10900L- OVERGROUND INSTALLATION

FILE NAME: 0208-STC109.H

CAT. NO.: SEE TAB

DWG. NO.: 0208-STC109.H-E

\\fs2019\ENG\Dev\By name\Gil\28-11-23 פרויקט הקמה לבורות\PRODUCT\0208-STC109.H- Septic Tank 10900L OVER ASSY\3D\

SCALE: 1:25 | SHEET 1 OF 1

© All rights reserved This document is intellectual property of Hofit Use only with explicit permission